ARAB 54 Complete.

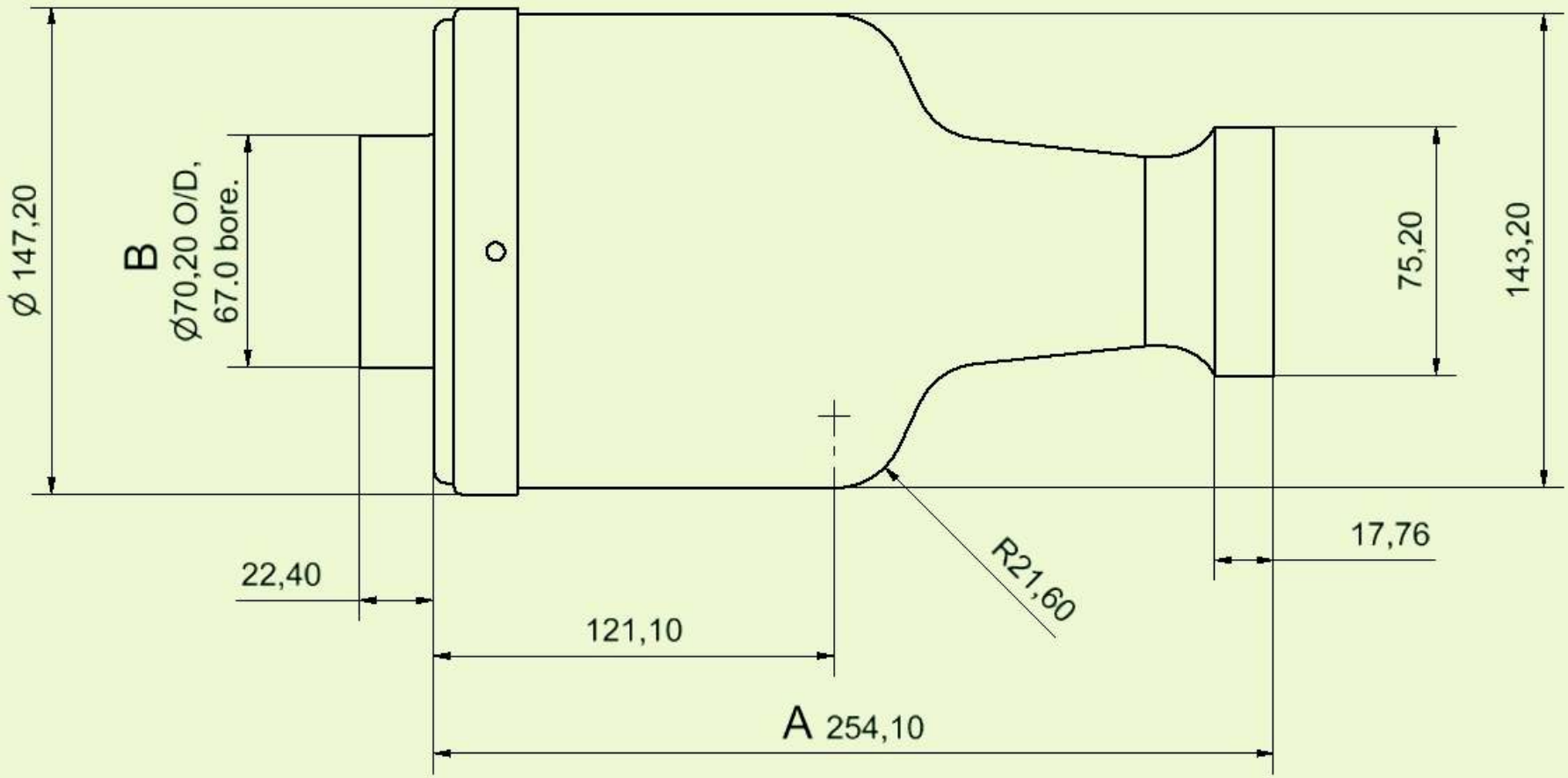

The dimensions shown give the theoretical perfect sizes. The method of manufacture of the components means that these dimensions can vary by +/- 0.5 mm.

Dimension A (overall length) can be reduced by shortening the main body of the housing.

Dimension B (outlet diameter) is available in other sizes and configurations.

ARAB 54				Part No.: ARAB 54	
File: ARAB54 assembly.iam	Sheet: 1 /1	No.:	Revision:	Who:	Date:
Drawing No.: ARAB54 assembly					
Print Date: marketing					
Created: 01/02/2008		1	Original Issue.	JMD	
DO NOT SCALE.	Dimensions are mm and angles are degrees unless otherwise stated.	This drawing is copyright and property of Induction Technology Group Ltd. The contents are confidential and must not be copied without prior consent of the company.			
Induction Technology Group Ltd.		Unit B Quinn Close, Seven Stars Industrial Estate, Whitley, Coventry. CV3 4LH Tel: 024 7630 5386			